L-LRMFL22-97NN4-HT

LoRa 868/915MHz SPI

L-LRMFL22-97NN4-HT LORA شج

SEMTECH LLCC68 شج LoRa

شي

ǎא q l l l ǎא n A

1 ï

1-1 شجـ

V	-0.5	+3.9	
dBm	-	+10	
	-40	+105	

1-2 شجـ [1]

				VBAT=3.1V for +22dBm VBAT=2.7V for +20dBm VBAT=2.4V for +19dBm
V	1.8	3.3	3.7	
	-40	-	+105	
(KHz)	-11	-	+11	
(MHZ)	860		930	863~870MHz ضر
(mA)	90	110	125	DC-DC 22dBm
	-	50	60	DC-DC EU868 max14dBm
(mA)	-	5.5	6.5	DC-DC Rx Boosted BW_L=125KHz
(uA)	-	0.6	2	
(dBm)	21	22	-	
(dBm)	-	-124	-	BW_L=125KHz,SF=7
LoRa bps	-	-	62.5K	
FSK bps	-	-	150K	
LoRa/GFSK/FSK				
				2 mm
		SPI	SPI	16MHz
(mm)	18.4*18.4*3.0mm	2-1	-	
	GB/T1804-C		C	

شخ شجـ

1-3 PA

	paDutyCycle	hpMax	deviceSel	paLut	Value in SetTxParams
915MHz	22dbm				

1-4 PA

	paDutyCycle	hpMax	deviceSel	paLut	Value in SetTxParams
868MHz	14dbm				

2 Ǚ Ɱ

2.1 Ồ Ḷ ƒ

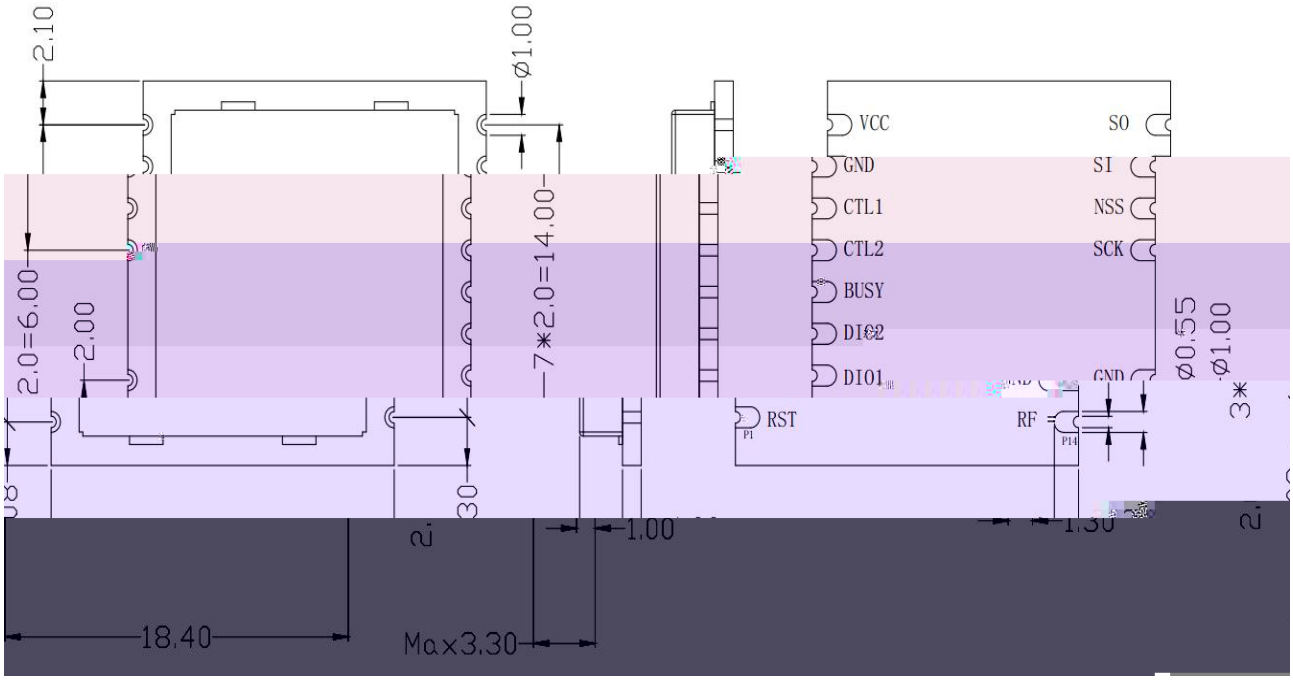

2-1 L-LRMFL22-97NN4-HT

2.2

2-2 L-LRMFL22-97NN4-HT

2.3 ã ɹ Ḧ ψ

2-1 ɱ

PIN		
P1	NRESET	
P2	DIO1	LLCC68
P3	DIO2	LLCC68
P4	BUSY	
P5	SW_CTL2	2,TX SW_CTL1=0 SW_CTL2=1 RX SW_CTL1=1 SW_CTL2=0 Sleep SW_CTL1=0 SW_CTL2=0
P6	SW_CTL1	1 TX SW_CTL1=0 SW_CTL2=1 RX SW_CTL1=1 SW_CTL2=0 Sleep SW_CTL1=0 SW_CTL2=0
P7	GND	ض
P8	VCC	VCC
P9	MISO	SPI
P10	MOSI	SPI
P11	NSS	SPI
P12	SCK	SPI
P13	GND	ض
P14	RF	

3 ɟ

3.1 ʊ ɥ ʐ ɤ ≠ ص

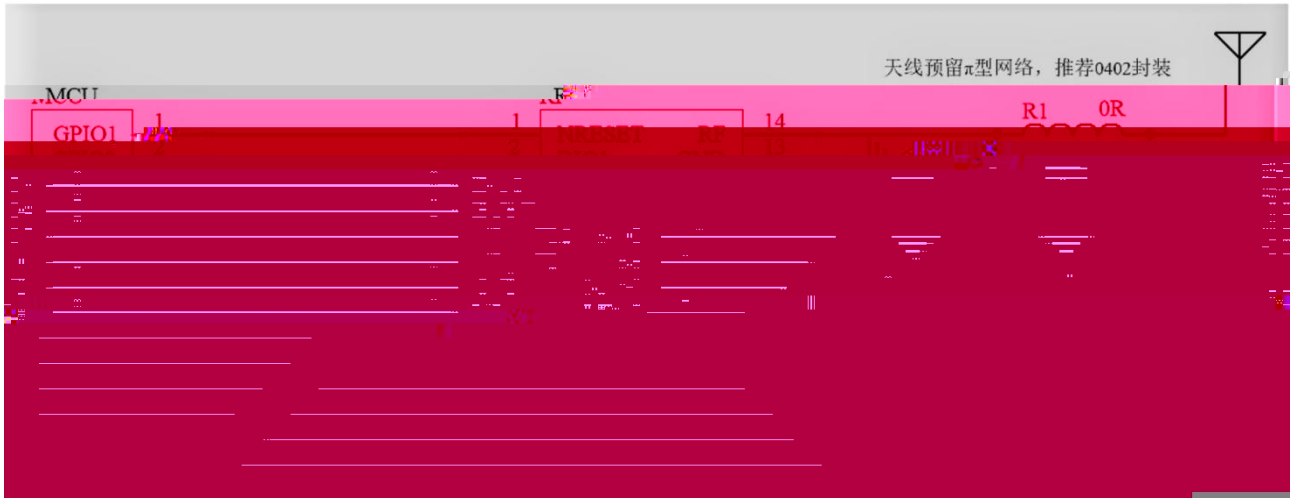

ʼ 3-1 ˮ ˡ ɥ

MODE	SW_CTL1	SW_CTL2
Transmit	0	1
Receive	1	0

3.1 ʊ ɥ ʐ ɤ ≠ ص’

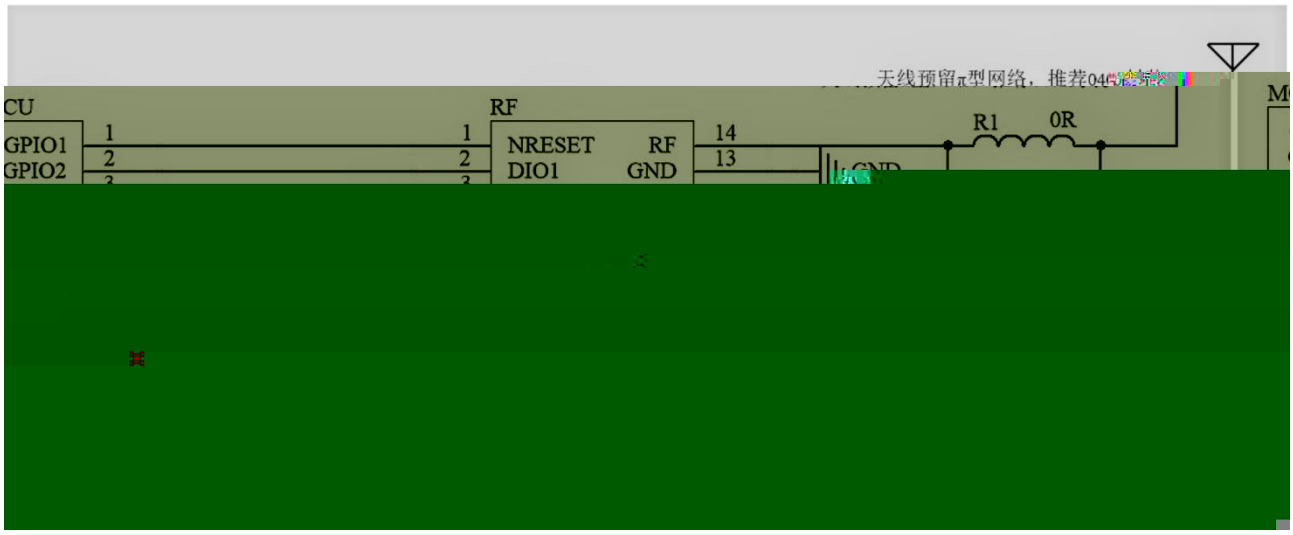

ɛ 3-2 ˮ ˡ ɥ

MODE	SW_CTL1
Transmit	0
Receive	1

```
void SX126xSetDio2AsRfSwitchCtrl( uint8_t enable )
{
    SX126xWriteCommand( RADIO_SET_RFSWITCHMODE, &enable, 1 );
}
```

3.2 ̃Ạ̈Ȯ פ ʐ Ṇ ج̈H

255

ضي

3-1 L-LRMFL22-97NN4-HT LoRa

BW / PL[2] / SF	125KHz	250KHz	500KHz
5	255 bytes 136ms	255 bytes 68ms	255 bytes 34ms
6	255 bytes 229ms	255 bytes 114ms	255 bytes 57ms
7	255 bytes 394ms	255 bytes 197ms	255 bytes 99ms
8	255 bytes 696ms	255 bytes 348ms	255 bytes 174ms
9	255 bytes 1250ms	255 bytes 625ms	255 bytes 313ms
10		255 bytes (1127ms	255 bytes 564ms
11			255 bytes 1025ms
12			

3.3 ̀ Ţ Ṵ Ṕ ↕ ȯ' گ̈

1 DIO MCU IO

2 50Ω ضر

3 ضي π

“ ”

4 5mm
5 ضر ضر
6
7 PCB LAYOUT (sub-1GHZ شج)

3.3 ا ù Ţ ى

ضي شج شج SPI API
شج LLCC68

API LLCC68 demo API

4

4.1 ᑫ ʌ ز ` ⵔ ï ʎ ڎ ʒ

.
.
. ضي
. π

4.2 ᑫ ה ˧ Ȁ ẁ

. شج شخ
. ضي شج
. شج MCU MCU شج
. ضي شج

4.3 ᑫ ڎ ʒ ز ` ï ᶻ

.
. ضي شج
. شج
. شج
.
. شج
. شج ضر

tierda

5 فذ ۴ ƙ

بم فذ ۴ ƙ

6 ~

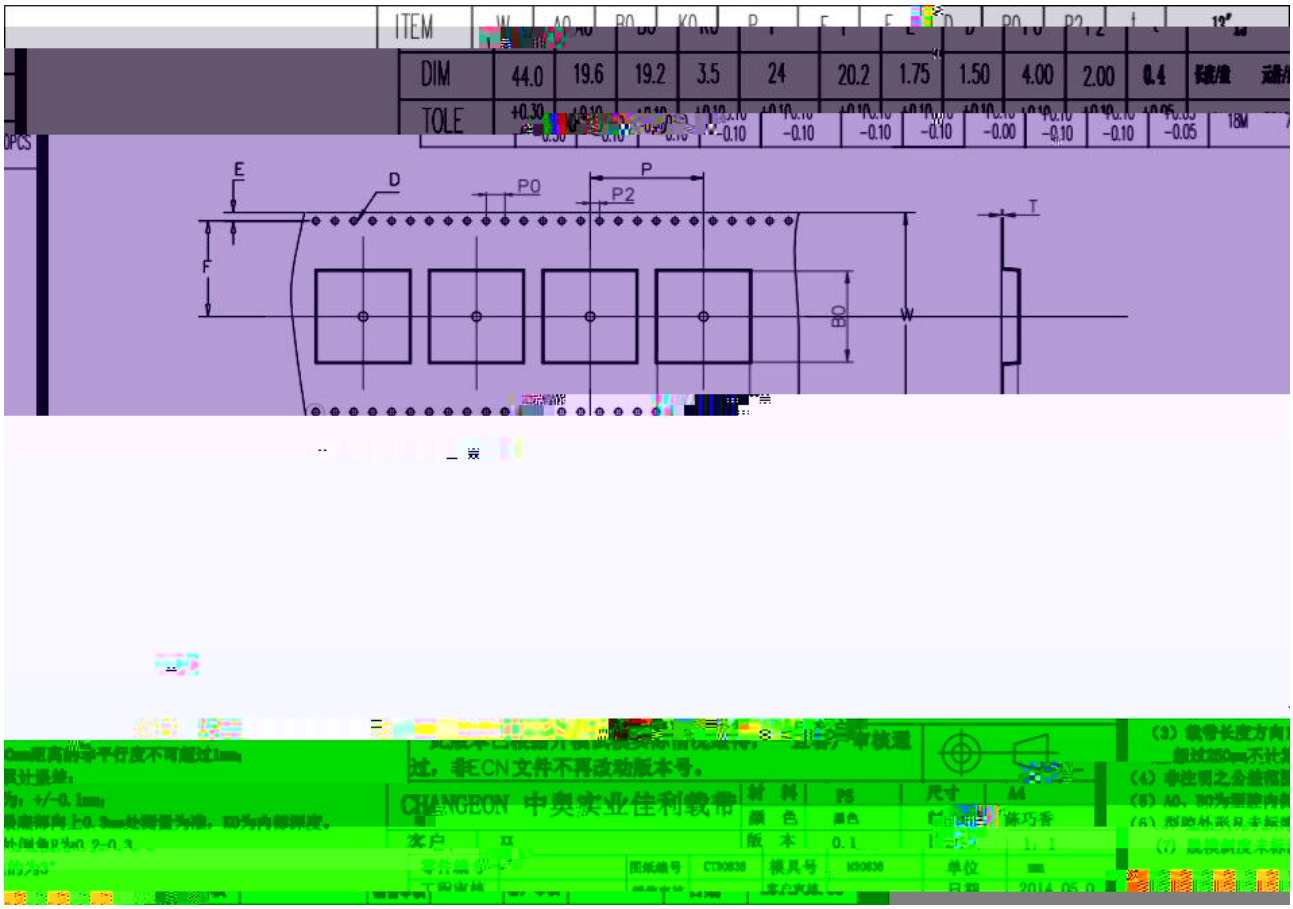
ITEM
DIM
TOLE
44.0
19.6
19.2
3.5
24
20.2
1.75
1.50
4.00
2.00
0.4
E
D
P0
P
P2
T
F
B0
W
CHANGEON 中奥实业佳利载带
材料
PS
尺寸
A4
颜色
黑色
客户
版本
0.1
单位
mm
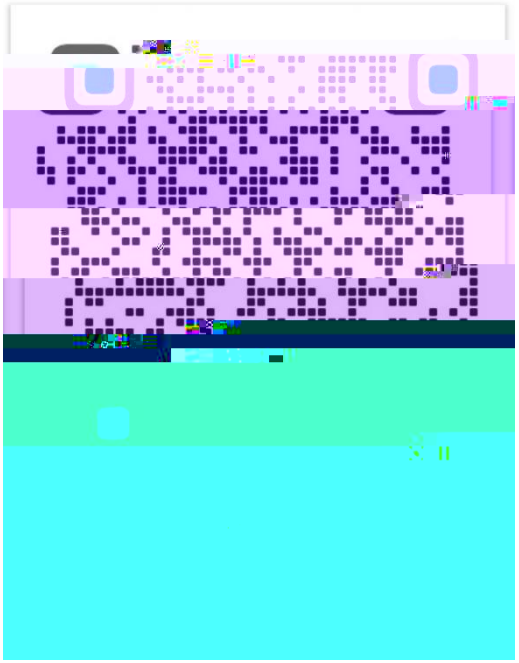
7 æ